CHMMC 2015 Individual Round Problems

November 22, 2015

Problem 0.1. *The following number is the product of the divisors of n.*

$$2^6 3^3$$

What is n?

Problem 0.2. *Let a right triangle have the sides $AB = \sqrt{3}$, $BC = \sqrt{2}$, and $CA = 1$. Let D be a point such that $AD = BD = 1$. Let E be the point on line BD that is equidistant from D and A. Find the angle AEB.*

Problem 0.3. *There are twelve indistinguishable blackboards that are distributed to eight different schools. There must be at least one board for each school. How many ways are there of distributing the boards?*

Problem 0.4. *A Nishop is a chess piece that moves like a knight on its first turn, like a bishop on its second turn, and in general like a knight on odd-numbered turns and like a bishop on even-numbered turns.*
A Nishop starts in the bottom-left square of a 3×3-chessboard. How many ways can it travel to touch each square of the chessboard exactly once?

Problem 0.5. *Let a Fibonacci Spiral be a spiral constructed by the addition of quarter-circles of radius n, where each n is a term of the Fibonacci series:*

$$1, 1, 2, 3, 5, 8, \ldots$$

(Each term in this series is the sum of the two terms that precede it.) What is the arclength of the maximum Fibonacci spiral that can be enclosed in a rectangle of area 714, whose side lengths are terms in the Fibonacci series?

Problem 0.6. *Suppose that $a_1 = 1$ and*

$$a_{n+1} = a_n - \frac{2}{n+2} + \frac{4}{n+1} - \frac{2}{n}$$

What is a_{15}?

Problem 0.7. *Consider 5 points in the plane, no three of which are collinear. Let n be the number of circles that can be drawn through at least three of the points. What are the possible values of n?*

Problem 0.8. *Find the number of positive integers n satisfying $\lfloor n/2014 \rfloor = \lfloor n/2016 \rfloor$.*

Problem 0.9. *Let f be a function taking real numbers to real numbers such that for all reals $x \neq 0, 1$, we have*

$$f(x) + f\left(\frac{1}{1-x}\right) = (2x-1)^2 + f\left(1 - \frac{1}{x}\right).$$

Compute $f(3)$.

Problem 0.10. *Alice and Bob split 5 beans into piles. They take turns removing a positive number of beans from a pile of their choice. The player to take the last bean loses. Alice plays first. How many ways are there to split the piles such that Alice has a winning strategy?*

Problem 0.11. *Triangle ABC is an equilateral triangle of side length 1. Let point M be the midpoint of side AC. Another equilateral triangle DEF, also of side length 1, is drawn such that the circumcenter of DEF is M, point D rests on side AB. The length of AD is of the form $\frac{a+\sqrt{b}}{c}$, where b is square free. What is $a+b+c$?*

Problem 0.12. *Consider the function $f(x) = \max\{-11x - 37, x - 1, 9x + 3\}$ defined for all real x. Let $p(x)$ be a quadratic polynomial tangent to the graph of f at three distinct points with x values t_1, t_2, and t_3. Compute the maximum value of $t_1 + t_2 + t_3$ over all possible p.*

Problem 0.13. *Circle J_1 of radius 77 is centered at point X and circle J_2 of radius 39 is centered at point Y. Point A lies on J_1 and on line XY, such that A and Y are on opposite sides of X. Ω is the unique circle simultaneously tangent to the tangent segments from point A to J_2 and internally tangent to J_1. If $XY = 157$, what is the radius of Ω?*

Problem 0.14. *Find the smallest positive integer n so that for any integers $a_1, a_2, \ldots, a_{527}$, the number*

$$\left(\prod_{j=1}^{527} a_j\right) \cdot \left(\sum_{j=1}^{527} a_j^n\right)$$

is divisible by 527.

Problem 0.15. *A circle Ω of unit radius is inscribed in the quadrilateral $ABCD$. Let circle ω_A be the unique circle of radius r_A externally tangent to Ω, and also tangent to segments AB and DA. Similarly define circles ω_B, ω_C, and ω_D and radii r_B, r_D, and r_D. Compute the smallest positive real λ so that $r_C < \lambda$ over all such configurations with $r_A > r_B > r_C > r_D$.*

Figure 1:

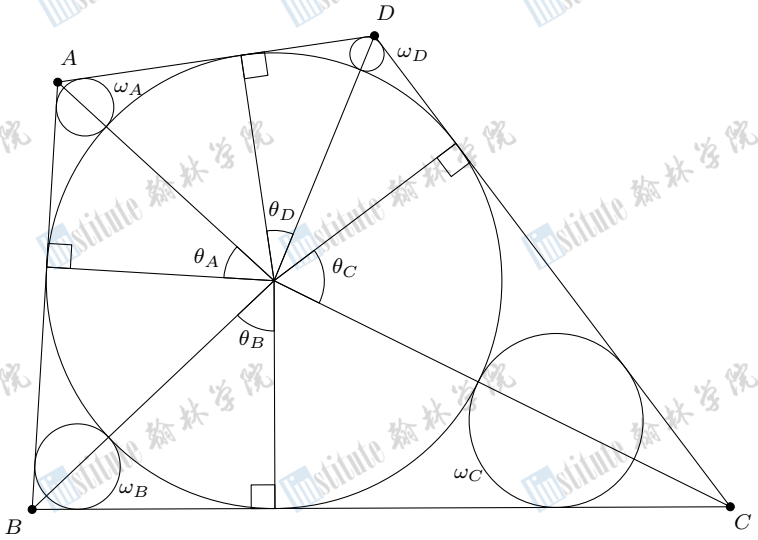
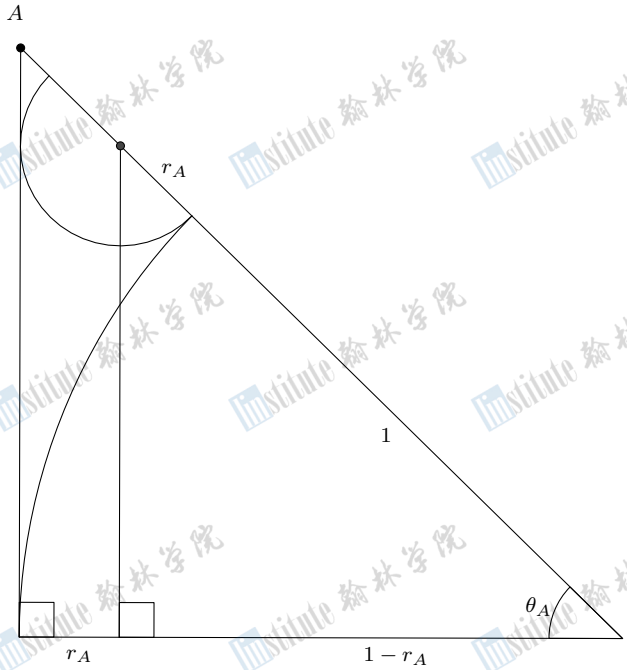
Figure 2: